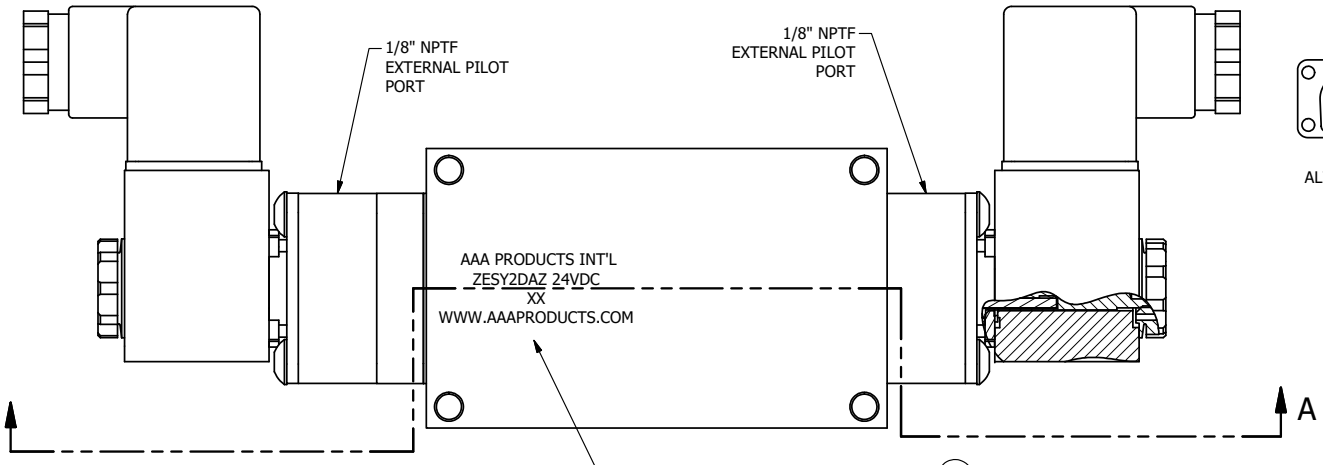

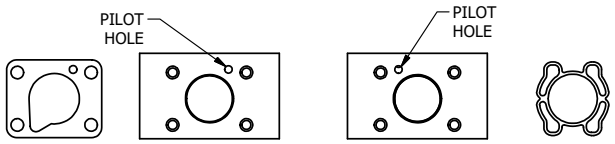

ALIGN PILOT AND HOLE IN GASKET
SIDE 'B' ONLY

ALIGN PILOT AND SLOT IN ADAPTOR
WITH GASKET IN BETWEEN, BOTH SIDES
(ADAPTOR SHOULD BE INSTALLED AS SHOWN)
SUPPLY 50-150 PSI TO 1/8" NPTF PILOT PORT IN ADAPTOR.

NOTES:
1) ALWAYS GIVE VALVE MODEL AND PART NUMBER WHEN ORDERING PARTS.

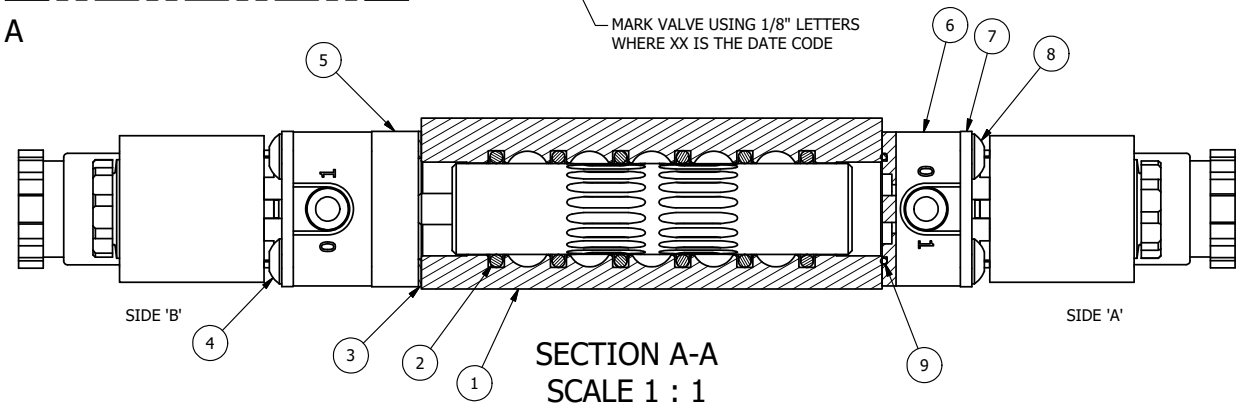

SECTION A-A
SCALE 1 : 1
VIEW FROM 3 PORT SIDE

FLG	QTY	PART NO	DESCRIPTION
9	2	EMG3	GASKET - END MOUNT SOLENOID, BUNA-N, 1/4" & 3/8" VALVES
8	4	V-584-SS	SCREW, 10-24 X 1, BUTTON HEAD SOCKET CAP, 18-8 OR 303 SS
7	2	SEC3-7	PLATE, RE-INFORCEMENT, SOLENOID, STAMPED, 304 STAINLESS
6	2	V-564	SYSTEM 8 INTRINSICALLY SAFE SOLENOID OPERATOR.
5	1	AY-ZEMY3D	ASSY - SPR CTR, REGEN CTR SPL, END MOUNT SOLENOID, BRASS, 1/4" & 3/8" VALVES
4	4	V-601-SS	SCREW, 10-24 X 1-1/2, BUTTON HEAD SOCKET CAP, 18-8 SS OR EQUIVQLENT
3	1	ECG3	GASKET - END CAP, 1/4" & 3/8" VALVE
2	6	V-39	O-RING, VITON, STD BODY, 1/4" & 3/8" VALVES
1	1	ZB2-1	BODY - BRASS, UPPER PILOTS (BUTTON BLEEDER), 1/4" SIDE PORT VALVE

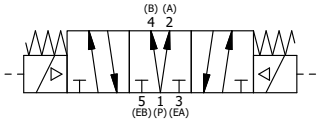

LIMITS ON DIMENSIONS UNLESS OTHERWISE SPECIFIED
2-PL DECIMAL ± .01
3-PL DECIMAL ± .005
FRACTIONAL ± 1/64
ANGULAR ± 1/2'

AAA PRODUCTS INTERNATIONAL
7114 Harry Hines Blvd
Dallas, TX 75235

DRAWN: RMcKenna	DATE: 6/12/2016	CHECKED: KWaite	DATE: 6/12/2016
SCALE: 1 : 1	SHEET: 1 OF 1	RELEASED: HWomack	DATE: 6/12/2016

TITLE:
1/4" SIDE PORT, DBL SOL, 3 POS, SPR CTR, REGEN CTR SPL, BRASS & SS, INTR SAFE, 24VDC, EXT PILOT

PART NO.: ZESY2DAZ 24VDC

REV.:

THE INFORMATION CONTAINED WITHIN THIS DOCUMENT IS PROPRIETARY TO AAA PRODUCTS AND MAY NOT BE DISCLOSED WITHOUT PRIOR WRITTEN CONSENT

D:\Engineering\Product\Valve\Assembly\Standard\SCV\DWG\ZESY2DAZ 24VDC.dw